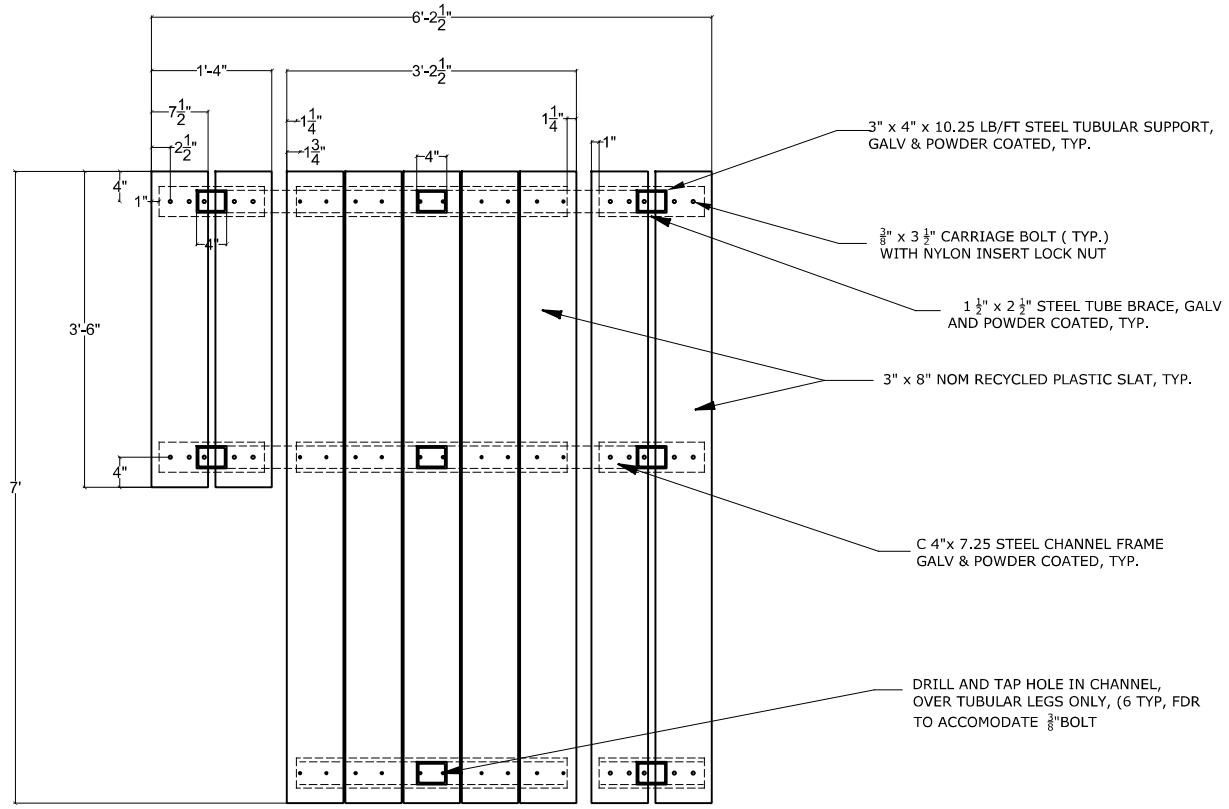

PLAN

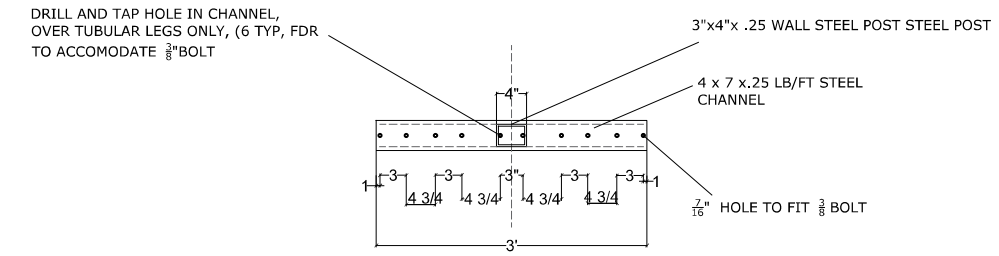

TABLE CHANNEL SUPPORT DETAIL

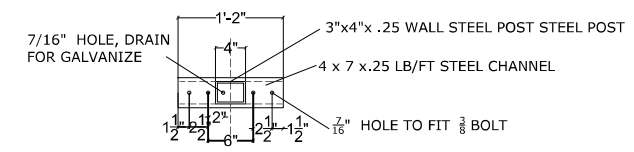

BENCH CHANNEL SUPPORT DETAIL

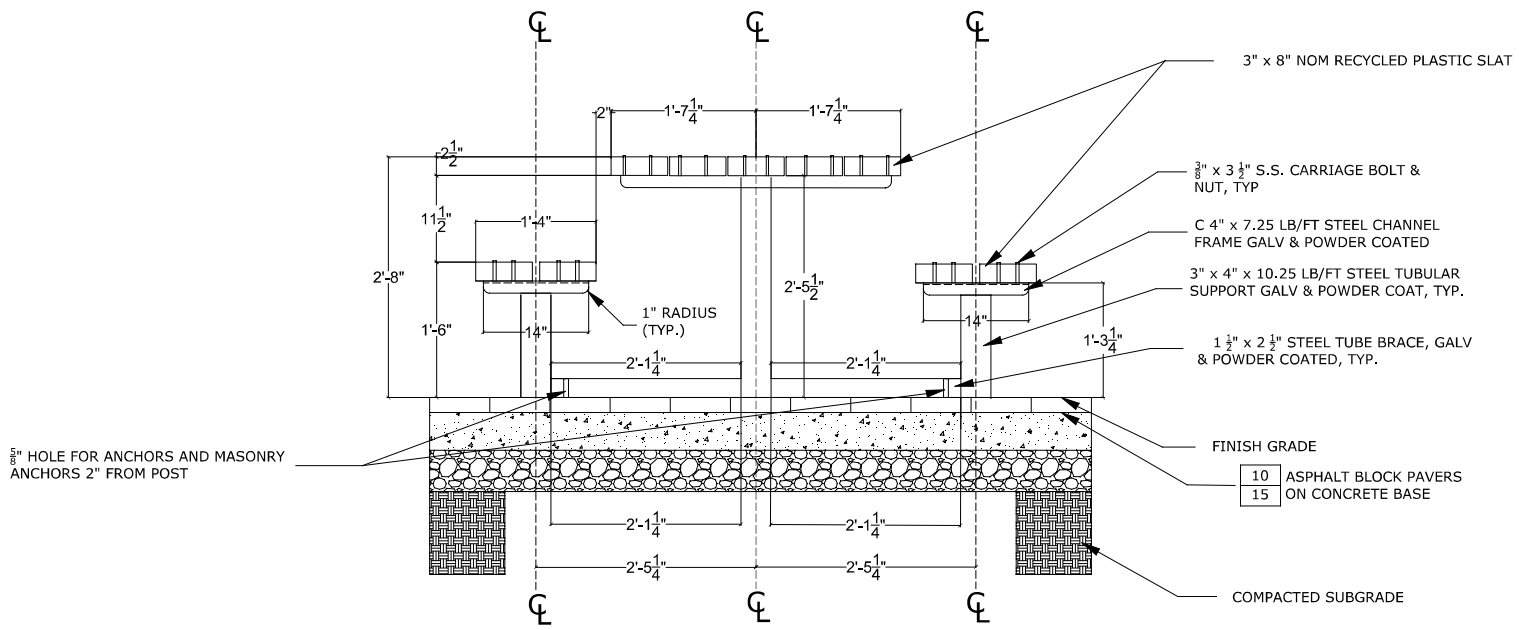

SECTION

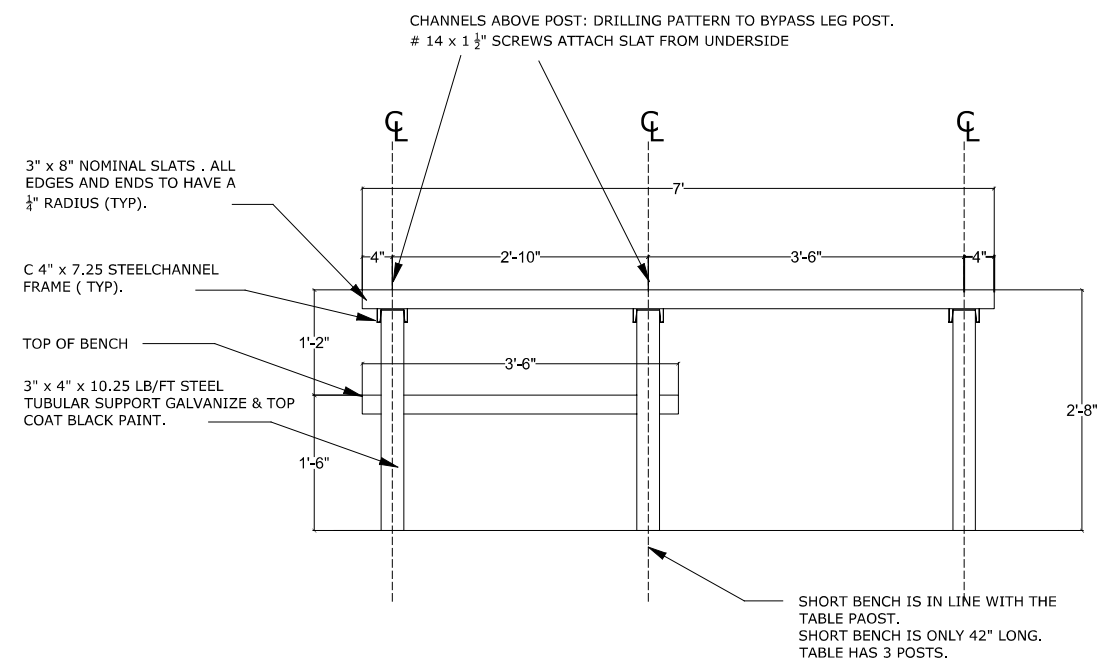

SIDE

KENNETH LYNCH & SONS

114 WILLENBROCK ROAD
OXFORD CT, 06478
203 - 264 - 2831
INFO@KLYNCHANDSONS.COM

3375 ADA PICNIC TABLE

Scale:	Date: 5/6/2025	Drawn: HLP Studio

RECYCLED PLASTIC LUMBER AND STEEL TABLE

#3375 SURFACE MOUNT